ADAPTIVE ACTIVE PHASED ARRAY RADARS (AAPAR)

JAYESH T P

www.edutalks.org

INTRODUCTION

The radar systems have been changing on the account of the requirements caused by:-

- Increase in the number of wanted and unwanted targets.
- Reduction in target size.
- Need to adapt a greater no. of electronic counter measures.

CATEGORIES OF RADAR

Two Categories:-

1. Single-function radars.
2. Multi function radar (passive phased array).

SINGLE FUNCTION RADAR

- Has fixed antenna with centralized transmitters.

Eg:1) Surveillance radar

2) Tracking radar

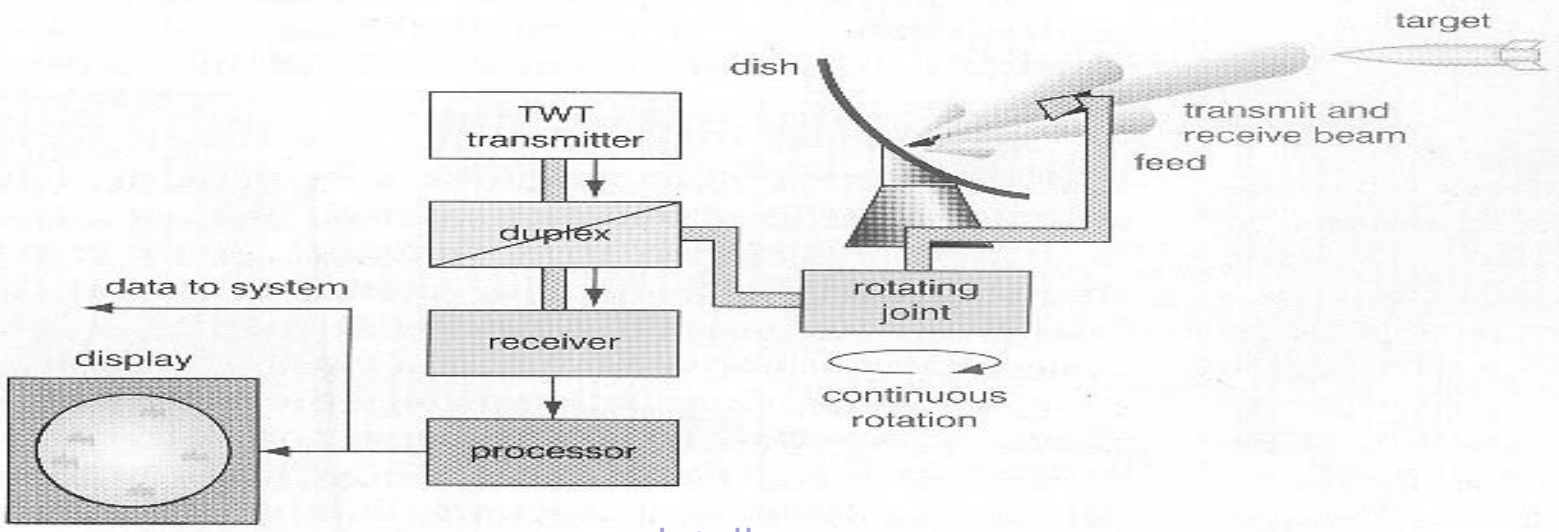

www.edutalks.org

MULTI-FUNCTION RADAR

- Passive phased array:- use phase shifters, switching elements.
- Carry out more than one function.

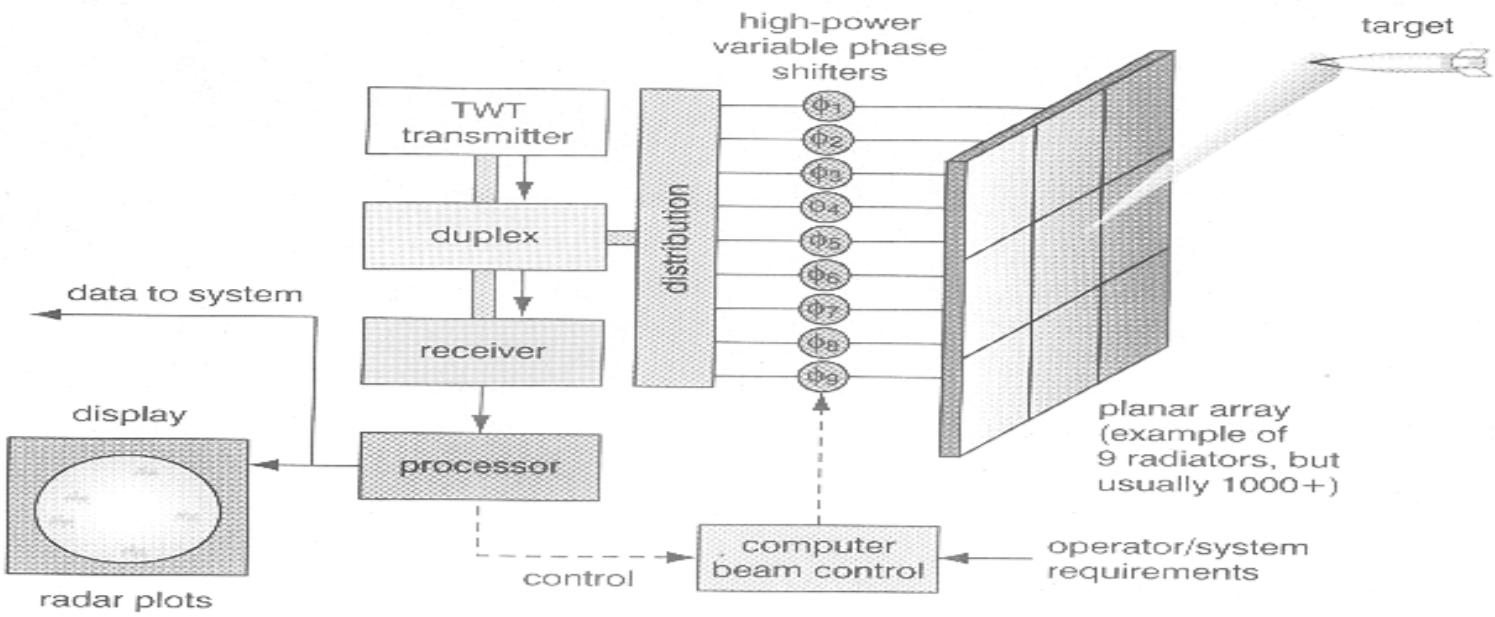

ADAPTIVE ACTIVE PHASED-ARRAY RADAR

- Power is radiated directly into space with minimum loss.
- Pure detection performance.
- Reducing power consumption costs.

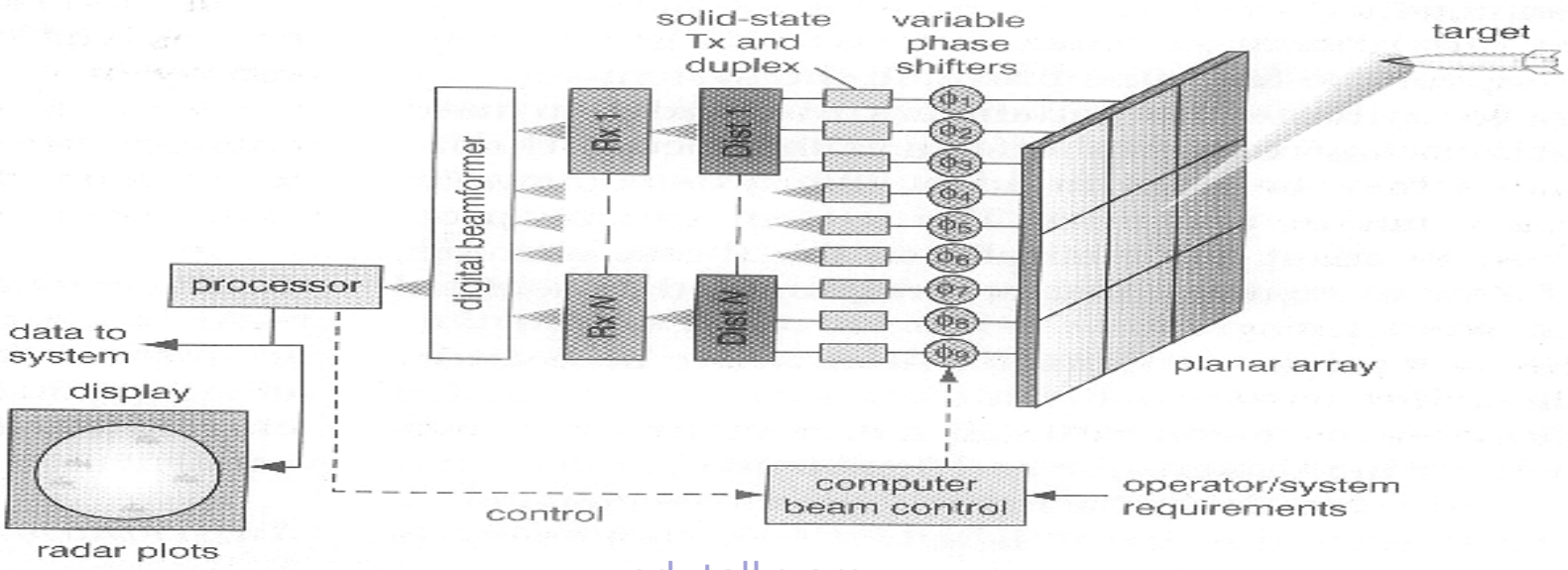

www.edutalks.org

ADAPTIVE RADAR FEATURES

1. Digital beam forming
2. Waveform generation and selection
3. Beam management
4. Frequency selection
5. Task scheduling
6. Tracking

.

OPERATIONAL REQUIREMENTS

- Principal functions :-
  - Volume surveillance
  - Target detection and confirmation
  - Target tracking
  - Target identification
  - Target trajectory or impact point calculation
  - Tracking of ECM emissions
  - Kill assessment
  - Missile and other communications

VOLUME SURVEILLANCE

- By the management of radar waveforms and beams:-
  - Energy usage is optimizes.
  - The probability of target determination is maximized

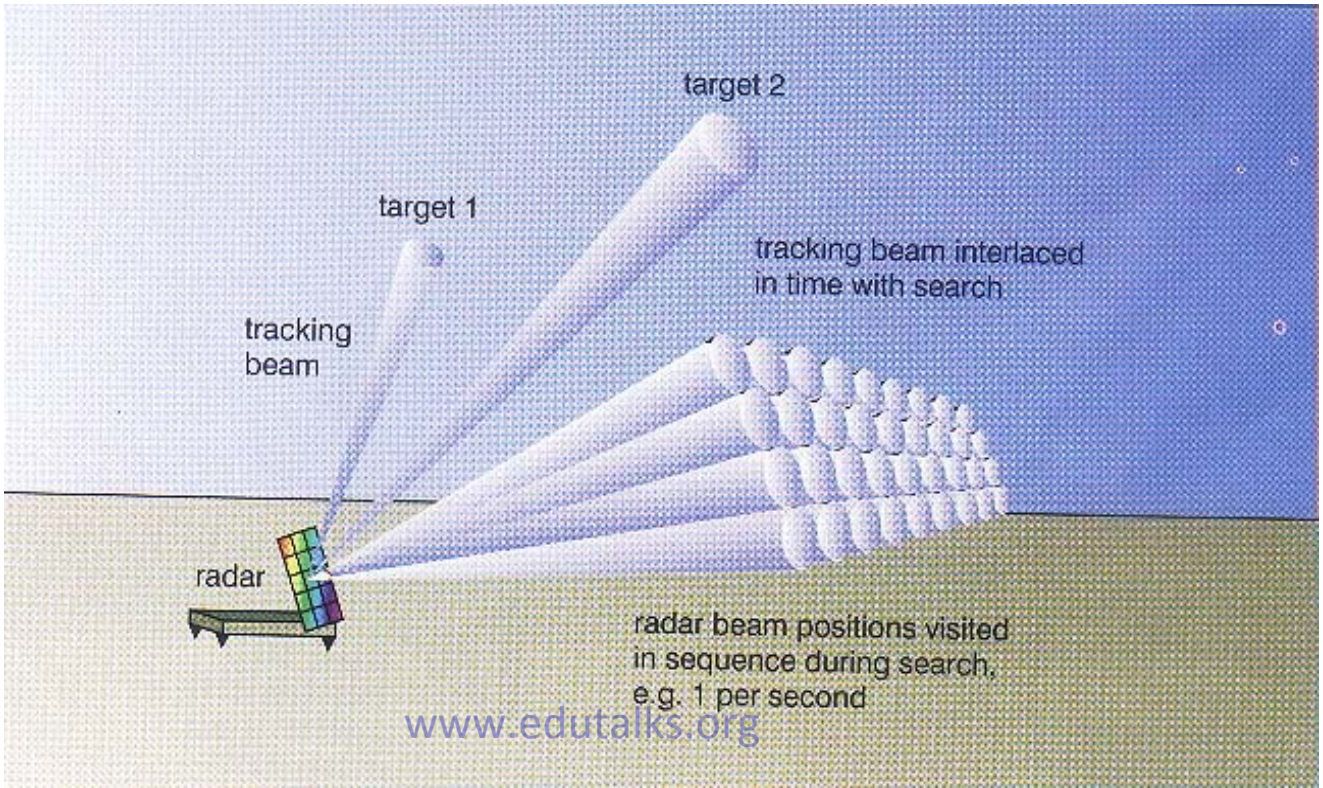

www.edutalks.org

DETECTION AND CONFIRMATION

- A look back beam using the position data.

- This significantly reducing the track confirmation delay.

CONCLUSION

- AAPAR can provide many benefit required for tomorrow's radar systems.
- Provides the radar system designer with an almost infinite range of possibilities.
- Breaks down the conventional walls between the traditional systems elements.
- It is multifunction radars systems.
- Use all the available RF power and to minimize RF losses.